Changeover Valves
Type 06510 - Diverter Valve

Cryogenic Diverter Valves, bronze, PN50
for the installation of two safety valves,
provided for bursting disc connections,
"cleaned and degreased for oxygen service"

Part No. 06510.X.0000
Female thread connection (G) acc. to ISO 228/1

Part No. 06510.X.6***
Female thread connection NPT acc. to ANSI B 1.20.1

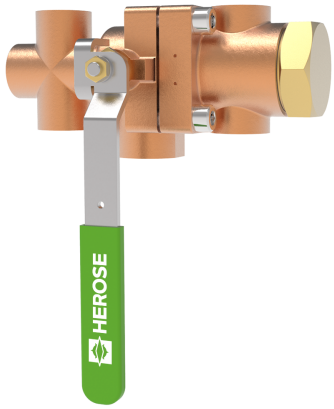

Available Options - on request only:
· Two extra test connections 1/4" edgeways
· Inlet: female thread (GW) 3/4"
· Outlet GA_1 with installed locking sleeve for easy positioning of safety valves
· Combination of different outlet threads GA_1 - GA_2
· Safety lock (Part No. 55394.0162.0765)

Applications:
Approved for air gases, vapours and cryogenic liquefied gases incl. LNG.
Working temperature: -196°C / -321°F (77K) up to +120°C / +248°F (393K)

Materials		DIN EN	ASTM
1	Body I	CC491K	B 62 UNS C83600
2	Body II	CC491K	B 62 UNS C83600
3	Ball	1.4571	A 276 Grade 316Ti
4	Seat rings	PCTFE	
5	Bush	CW614N	B 283 UNS C38500
6	Spring plates	1.4571	A 313 Grade 316Ti
7	Spring clamp	CW614N	B 283 UNS C38500
8	Thread ring	CW614N	B 283 UNS C38500
9	Plug	CW614N	B 283 UNS C38500
10	Stem	1.4301	A 276 Grade 304
11	Gland packing	Graphite / PTFE	
12	Lever	1.4404	A479 Grade 316L

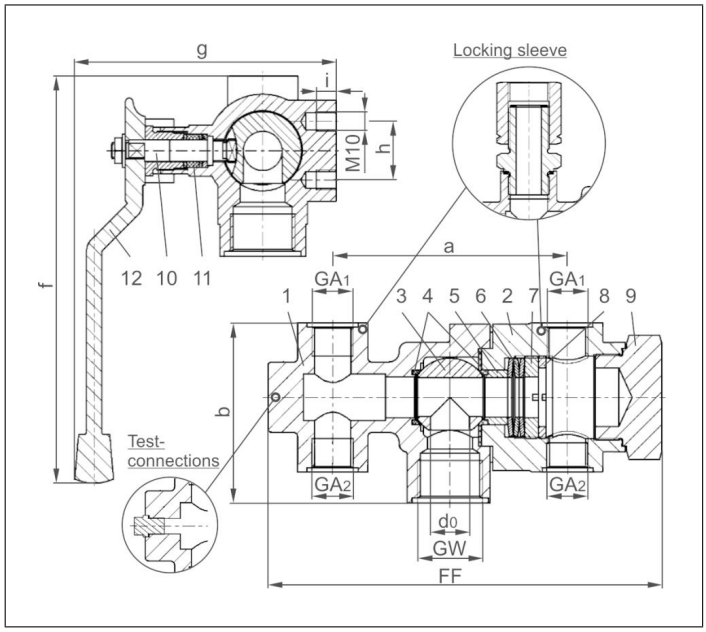

Type 06510 - Standard design	Technical Data		
Nominal Size	**DN**	**20**	**20**
Dimension code	.X.	2004	2006
Flow diameter	d_0	20	20
Inlet	GW	1	1
Outlet	GA_1	1/2	3/4
Outlet	GA_2	1/2	1/2
Face-to-face dimension	FF	201	201
Length	a	120	120
Height	b	92	92
Length	f	208	208
Length	g	134	134
Length	h	30	30
Thread depth	i	10	10
Weight	ca. kg	4.8	4.7
Kvs - Value, one side open	m^3/h	7.7	7.7
Cv - Value, one side open	gal /min	9.2	9.2

Dimensions in mm.

Important:
The valves must be fixed at the provided threads M10.

Spare part kit for lever replacement:
For Change-over Valves 0651X, there is a spare part kit available for replacing the lever (also suitable for versions before 07/2024).
DN20 30320.0200.0783
DN32 30320.0320.0783